Occhio

Mito volo 140 var pure
datasheet

Linear LED pendant luminaire with double-sided light output, available in the following lengths: 136 cm. There are two lighting effects to choose from: table (wide) is perfect for use over tables as the light is diffused widely both upward and downward, while (narrow) is more suitable for suspended room luminaires as the light is tightly concentrated downward and diffuses more widely upward. The suspension length is continuously adjustable between 65–165 cm. The luminaire can be recess-mounted in hollow ceilings using the recessed mounting plate supplied. Luminaire incl. integrated power supply unit and connection to 230 V AC. The luminaire can be controlled using »touchless control« (gesture control at the head), Occhio air or DALI, or can be dimmed using a trailing-edge phase cut dimmer*. The color temperature is continuously adjustable between 2700–4000 K or can be preset (2700 / 3000 / 3500 / 4000 K) using »touchless control«, Occhio air or DALI.

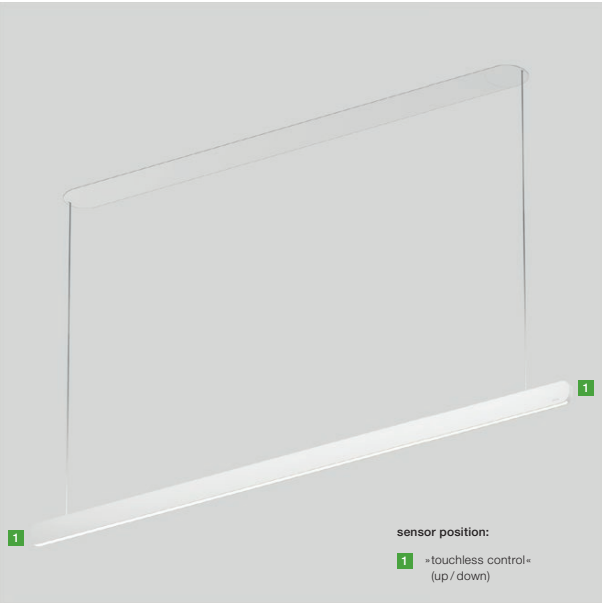

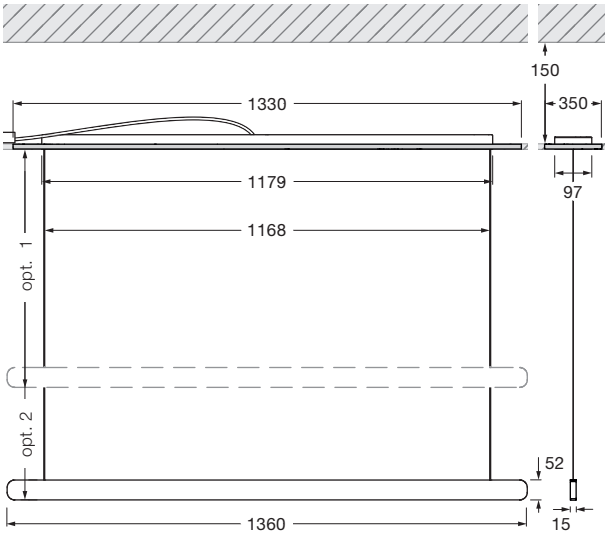

opt. 1 adjustment range 650 – 1650
opt. 2 adjustment range 1350 – 2350
incl. power supply unit

dimensions in mm

technical data Mito volo 140 var pure

properties	material	head aluminium painted or PVD-coated, optical plastic canopy painted plastic plasterboard reinforced plasterboard
	height adjustment	option 1 650 – 1650 mm (variable) / option 2 1350 – 2350 mm (variable)
	weight (luminaire + plasterboard)	5.0 kg + 5.5 kg
surface	head	bronze, matt gold, rose gold, matt silver, matt white, matt black, phantom, black phantom
	canopy	matt white, matt black
Occhio »color tune« LED	average life time	> 50.000 hrs
	energy efficiency class (luminous efficiency)	G (67 lm / W)
	power	LED 60 W (incl. Occhio power supply unit approx. 68 W, standby < 0.5 W)
	color rendering index	high color; CRI Ra 95
	color temperature (color consistency)	2700–4000 K (2-step)
electricity	dimming	via trailing-edge phasecut dimmer *, »touchless control«, Occhio air or DALI
	connection	230 V AC / 50 Hz
	power factor power supply (cos φ1)	0.9
	flicker / stroboscopic effect	1 (PstLM) / 0.9 (SVM)
	permitted operating conditions	max. 30°C for indoor use only

* For a list of compatible dimmers, see www.occhio.de/dim_en, trailing-edge phasecut dimmer not combinable with »touchless control«, Occhio air and DALI

IP 20

Mito volo 140 var pure
lighting effects

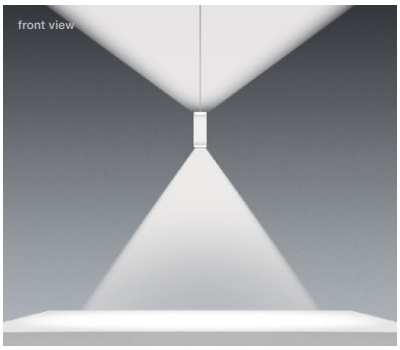

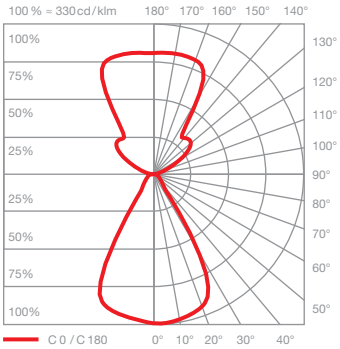

table (wide)
wide light beam (up and down), beam angle approx. 80° (down)

inserts:	wide / flood		
luminous flux:	high color	60 W	3900 lm

UGR (4H8H) < 19 *

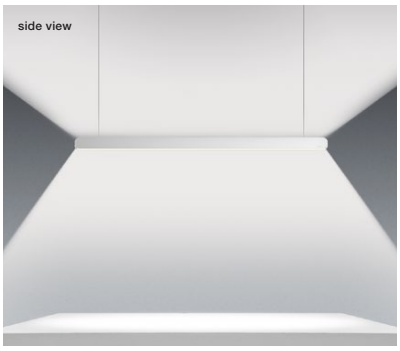

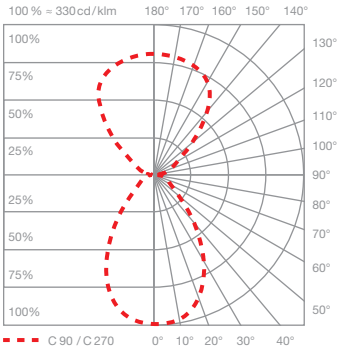

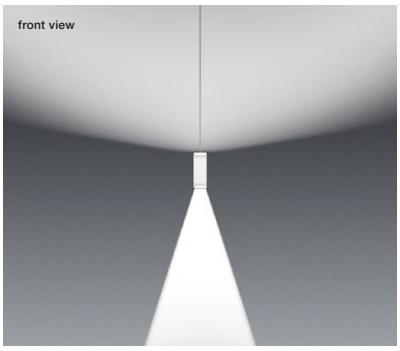

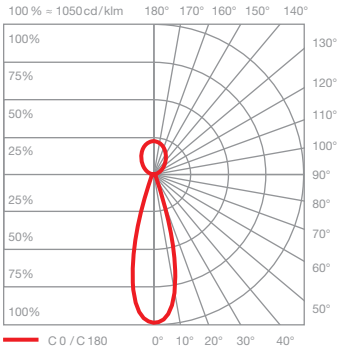

room (narrow)
concentrated light downwards, beam angle approx. 25°, diffuse upwards

inserts:	narrow / diffuse		
luminous flux:	high color	60 W	3700 lm

UGR (4H8H) < 19 *

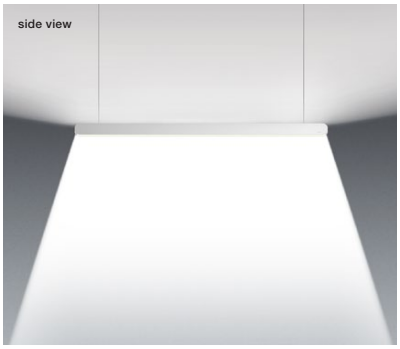

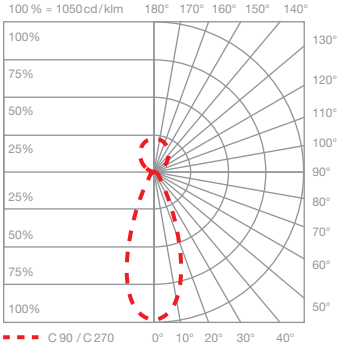

For a reliable assessment of glare values in a real application of a luminaire we recommend to carry out an individual calculation which can be prepared by our lighting team (project-support@occhio.de).

Mito volo 140 var pure pendulum length

Option 1 adjustment range **65 – 165 cm** recommended with a **ceiling height** from **2,4 m** to **3,0 m**

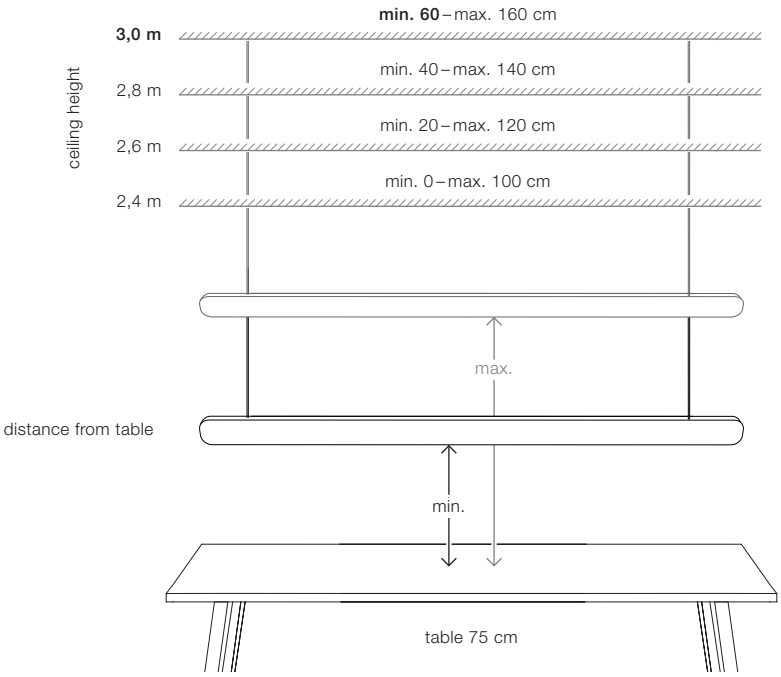

Option 2 adjustment range **135 – 235 cm** recommended with a **ceiling height** from **3,0 m** to **3,8 m**

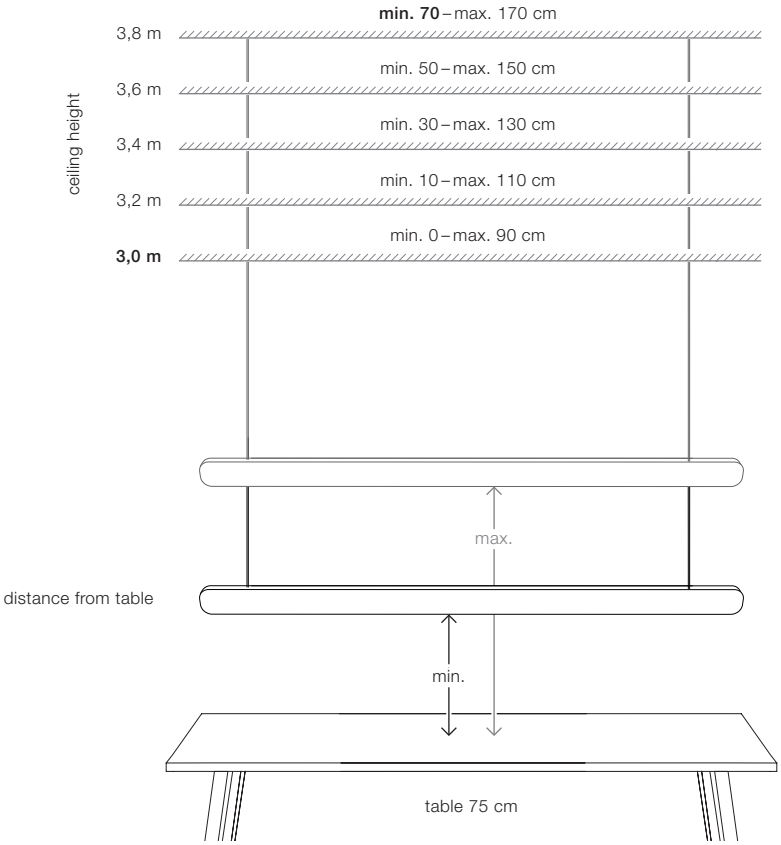

control options

Control

Mito set box

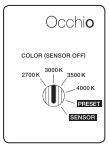

sospeso / aura / sfera / sfera su / volo

soffitto / alto flat

alto & alto side

sospeso / aura / sfera / volo:
COLOR (Sensor off)
adjustable color temperature (4 steps)
trailing-edge phase cut dimming possible

PRESET (sospeso / aura / volo)
adjustable color temperature (4 steps)
adjustable up / downlight ratio (5 steps)
trailing-edge phase cut dimming possible

PRESET (sfera)
color temperature adjustable (4 stages)
light intensity adjustable (5 stages)

SENSOR
»touchless control« (gesture control)
switching, dimming, up / down fading*
»color tune« (color temperature continuously adjustable)
no external dimming possible

soffitto / alto / alto side:
COLOR
adjustable color temperature (4 steps)
trailing-edge phase cut dimming possible

*not with sfera

Mito »air« box

sospeso / aura / sfera / volo

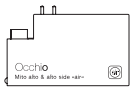

alto & alto side

Occhio air (Bluetooth control using Occhio air app) or air controller (optional) control of individual luminaires, groups and scenes

sospeso / aura / sfera / volo:
SENSOR
»air« + »touchless control« (Bluetooth- and gesture control)
control via »touchless control« and Occhio air app or »air« controller

SENSOR OFF
»air«
control via Occhio air App or »air« controller
switching, dimming, up / down fading »color tune« (color temperature continuously adjustable)

terra / raggio / largo / soffitto / alto flat

terra / largo / raggio:
»air«, »touchless control« and »body sensor« (raggio / terra) (Bluetooth- and gesture control)
control via »touchless control«, »body sensor« and Occhio air App or »air« controller

»ambient light control« (terra)
adjustment to ambient light

»presence sensor« (terra)
presence identification and automatically shutdown by presence sensor

deactivation and adjustable via control and sensor with »air« app

alto / alto side:
»air« (Bluetooth - control)
control via Occhio air App or »air« controller
switching, dimming
»color tune« (color temperature continuously adjustable)

with Mito »air« box no external dimming possible

Mito DALI box (control via DALI)

sospeso / volo / soffitto / alto flat

aura

alto & alto side up

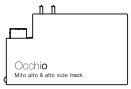

alto & alto side track

sospeso / aura / volo:
– color tune adjustable*
– adjust continuously dimming
– up + downlight seperate controllable (two DALI adresses needed)
– no »touchless control«, no fading

soffitto / alto / alto side:
– color tune adjustable*
– continuously dimming

* DALI controller DALI Device type 8 (DT8) for controlling of the color tune necessary further signs on www.occhio.com/dali

Occhio

Mito volo 140 var pure
DALI connection diagram

A maximum of 32 Mito volo units can be assigned to each DALI circuit.

The Mito volo requires two DALI addresses per luminaire, which enables control of the top and bottom sides via their own respective DALI address. The maximum output is reached if both DALI luminaires (top and bottom side) are set to maximum brightness (45 W = 22 W up and 22 W down; 60 W = 30 W up and 30 W down).

The Mito volo units can be organized into as many as 16 groups and equipped with an additional 16 scenarios (predefined settings).

Using a DALI short address, they can be actuated and configured individually. In addition, the bi-directional data transfer lets users query the state / status of individual luminaires.

You can find more detailed information at www.occhio.com/dali.

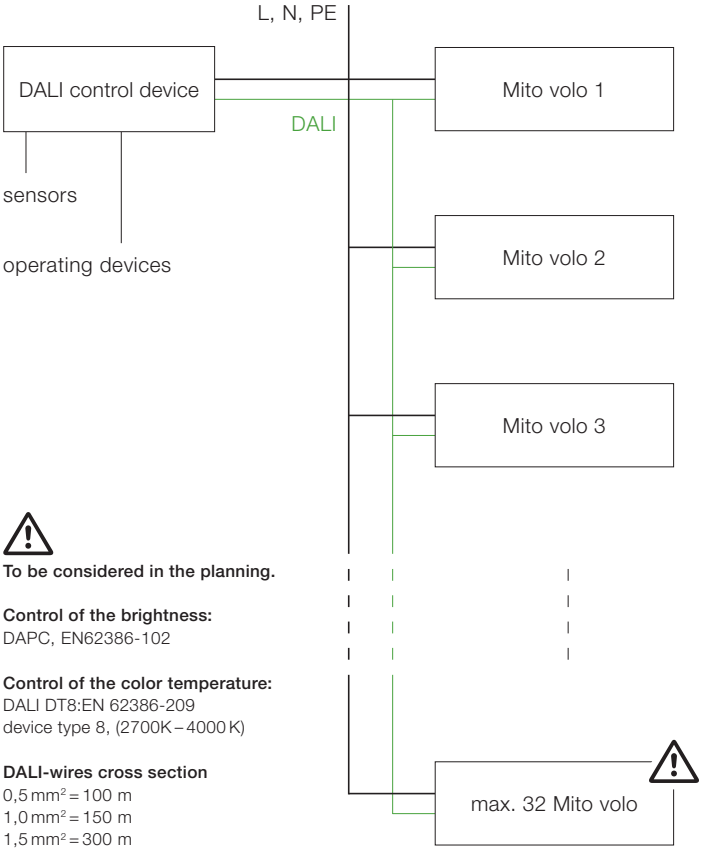

To be considered in the planning.

Control of the brightness:
DAPC, EN62386-102

Control of the color temperature:
DALI DT8:EN 62386-209
device type 8, (2700K – 4000 K)

DALI-wires cross section
0,5 mm² = 100 m
1,0 mm² = 150 m
1,5 mm² = 300 m